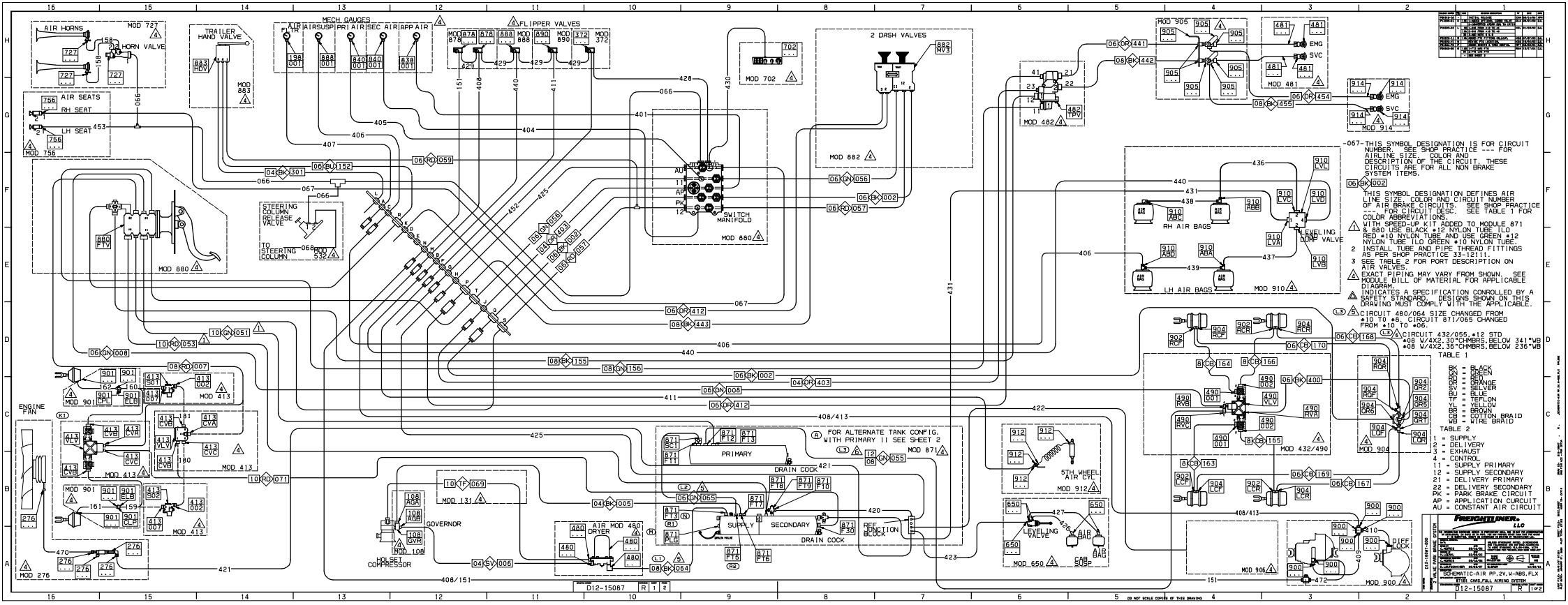

-067- THIS SYMBOL DESIGNATION IS FOR CIRCUIT NUMBER. SEE SHOP PRACTICE --- FOR AIRLINE SIZE. COLOR AND DESCRIPTION OF THE CIRCUIT. THESE CIRCUITS ARE FOR ALL NON BRAKE SYSTEM ITEMS.

06 BK 002

THIS SYMBOL DESIGNATION DEFINES AIR LINE SIZE, COLOR AND CIRCUIT NUMBER OF AIR BRAKE CIRCUITS. SEE SHOP PRACTICE --- FOR CIRCUIT DESC. SEE TABLE 1 FOR COLOR ABBREVIATIONS.

1 WITH SPEED-UP KIT ADDED TO MODULE 871 & 880 USE BLACK #12 NYLON TUBE ILO RED #10 NYLON TUBE AND USE GREEN #12 NYLON TUBE ILO GREEN #10 NYLON TUBE.

2 INSTALL TUBE AND PIPE THREAD FITTINGS AS PER SHOP PRACTICE 33-12111.

3 SEE TABLE 2 FOR PORT DESCRIPTION ON AIR VALVES.

4 EXACT PIPING MAY VARY FROM SHOWN. SEE MODULE BILL OF MATERIAL FOR APPLICABLE DIAGRAM.

INDICATES A SPECIFICATION CONROLLED BY A SAFETY STANDARD. DESIGNS SHOWN ON THIS DRAWING MUST COMPLY WITH THE APPLICABLE.

L3 5 CIRCUIT 480/064 SIZE CHANGED FROM #10 TO #8. CIRCUIT 871/065 CHANGED FROM #10 TO #06.

L3 6 CIRCUIT 432/055, #12 STD
#08 W/4X2.30"CHMBRS, BELOW 341"WB
#08 W/4X2.36"CHMBRS, BELOW 236"WB

TABLE 1

BK = BLACK
GN = GREEN
RD = RED
OR = ORANGE
SV = SELVER
BU = BLUE
TF = TEFLON
YL = YELLOW
BR = BROWN
CB = COTTON BRAID
WB = WIRE BRAID

TABLE 2

1 = SUPPLY
2 = DELIVERY
3 = EXHAUST
4 = CONTROL
11 = SUPPLY PRIMARY
12 = SUPPLY SECONDARY
21 = DELIVERY PRIMARY
22 = DELIVERY SECONDARY
PK = PARK BRAKE CIRCUIT
AP = APPLICATION CURCUIT
AU = CONSTANT AIR CIRCUIT

FREIGHTLINER LLC

SCHEMATIC-AIR PP, 2V, V-ABS, FLX
STD1 CHAS, FULL AIRING SYSTEM

D12-15087 R 1 OF 2